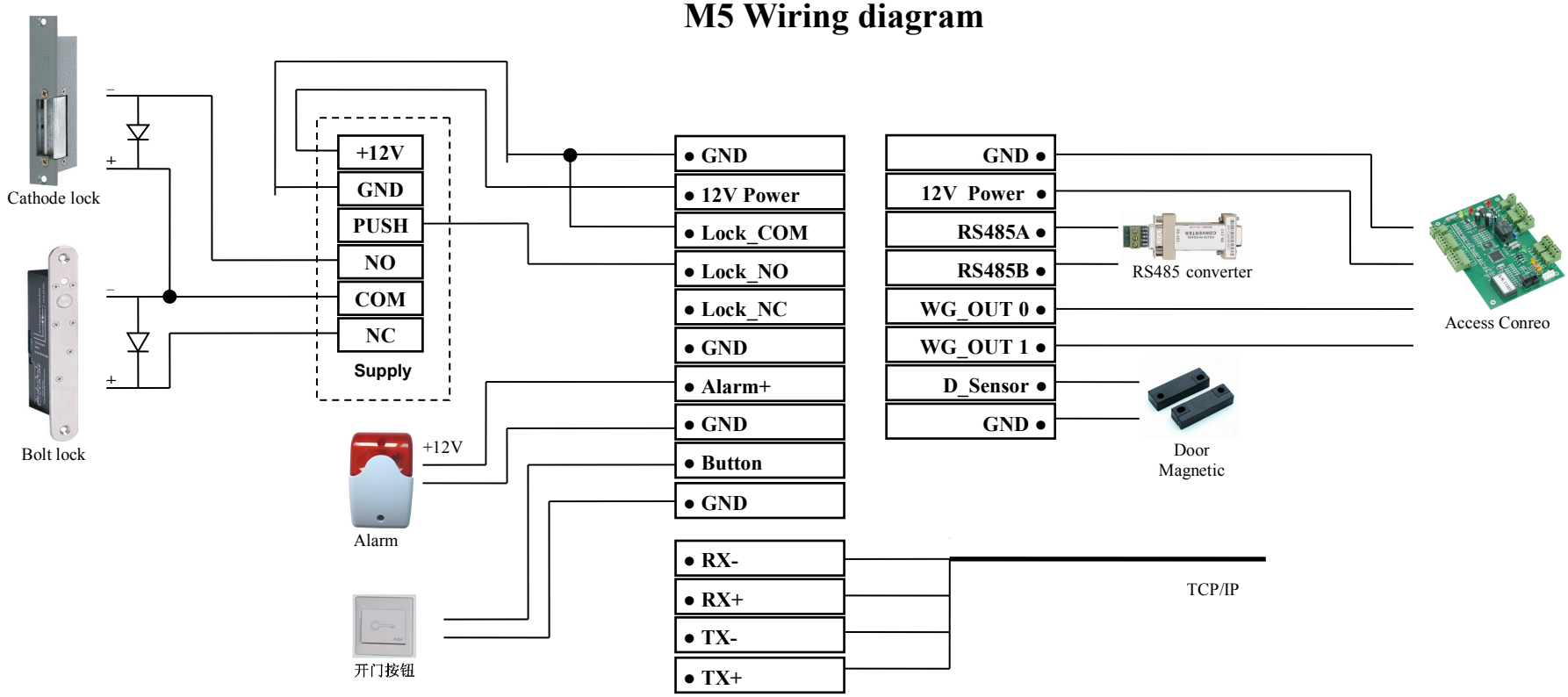M5 Wiring diagram